Yonos MAXO 40/0,5-12 PN 6/10

Glandless pump circulator

Article number: 2120647

Data sheet

Hydraulic data

Maximum operating pressure *PN*	10 bar
Head max H_{max}	12.6 m
Flow max Q_{max}	24.8 m³/h
Minimum suction head at 50 °C *m*	5 m
Minimum suction head at 95 °C *m*	12 m
Minimum suction head at 110 °C	18 m
Min. fluid temperature T_{min}	-20 °C
Max. fluid temperature T_{max}	110 °C
Min. ambient temperature T_{min}	-20 °C
Max. ambient temperature T_{max}	40 °C

Motor data

Energy efficiency index (EEI) *	≤ 0.20

Motor data

Mains connection	1~230 V ±10%, 50/60 Hz
Min current I_{min}	0.17 A
Max current I_{max}	2.4 A
Rated power P_2	450 W
Min. speed n_{min}	950 1/min
Max. speed n_{max}	4600 1/min
Power consumption $P_{1\,min}$	15 W
Power consumption $P_{1\,max}$	550 W
Emitted interference	EN 61800-3;2004+A1;2012 /residential area (C1)

Motor data

Interference resistance	EN 61800-3;2004+A1;2012 /industrial environment (C2)
Threaded cable connection	2 x M20x1.5
Insulation class	F
Protection class	IPX4D

* The benchmark for the most efficient circulators is EEI ≤ 0.20

Materials

Pump housing	Grey cast iron
Impeller	PPS-GF40
Shaft	Stainless steel
Bearing	Carbon-graphite

Installation dimensions

Pump connection	DN 40
Port-to-port length *L0*	250 mm

Equipment/function

Function

Control mode	Δp-v for variable differential pressure Δp-c for constant differential pressure Constant speed (3 speed stages)
Multi pump operation	Main/Standby (with Connect Module Yonos MAXO)
Display	Setpoint Fault signals (error codes)

Equipment

Approvals and labels	CE VDE EAC

Equipment

Display	LED segment display
Display information	Basic Versio n: LED display (small) for showing the set head or speed stage.
Pump control	Electronic-controlled pump
Quick electrical connection	Wilo plug
Thermal insulation shell	As accessory
Blocking-current proof motor	yes
Particle filter	yes

Connectivity

Digital input	Ext. OFF (via accessories Wilo-Connect module Yonos MAXO)
Digital output	SSM SSM/SBM (via accessories Connect module Yonos MAXO)

Pump curves

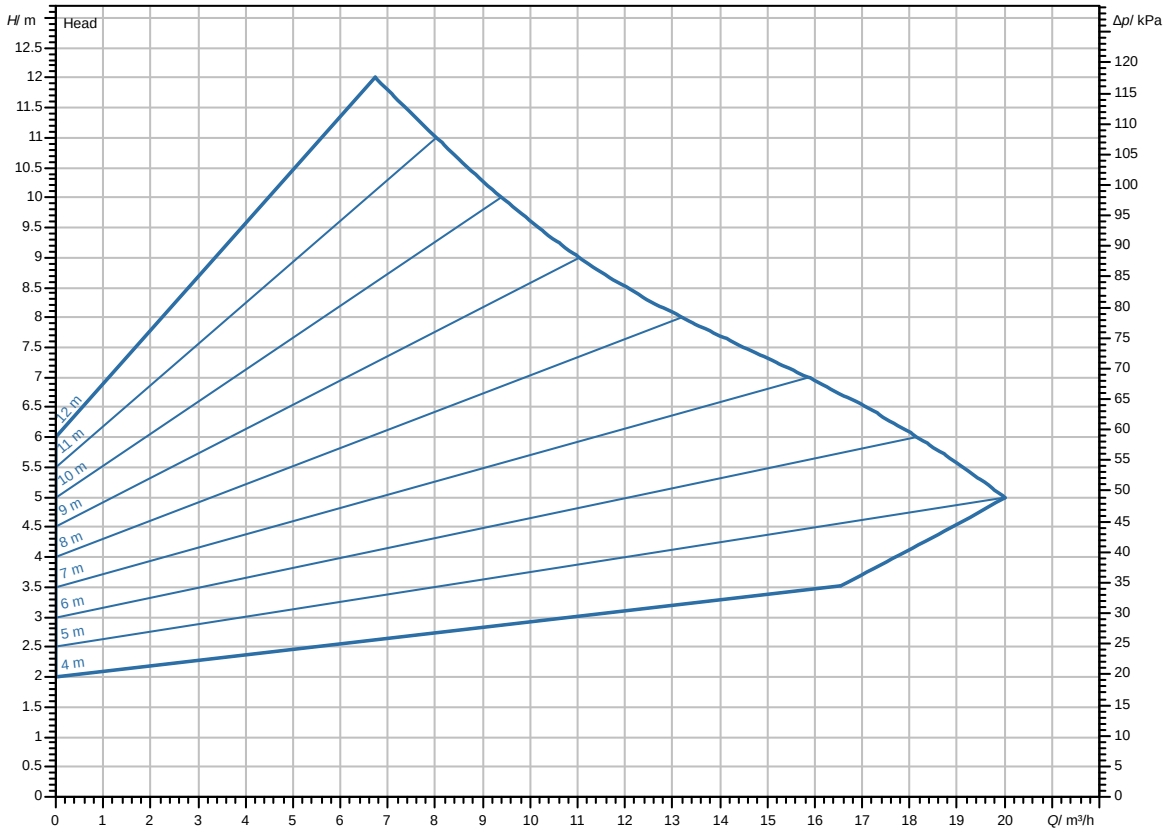

Fluid media	Water 100 %
Fluid temperature *T*	20.00 °C

Dimensions and dimensions drawings

Yonos MAXO 40/0,5/12

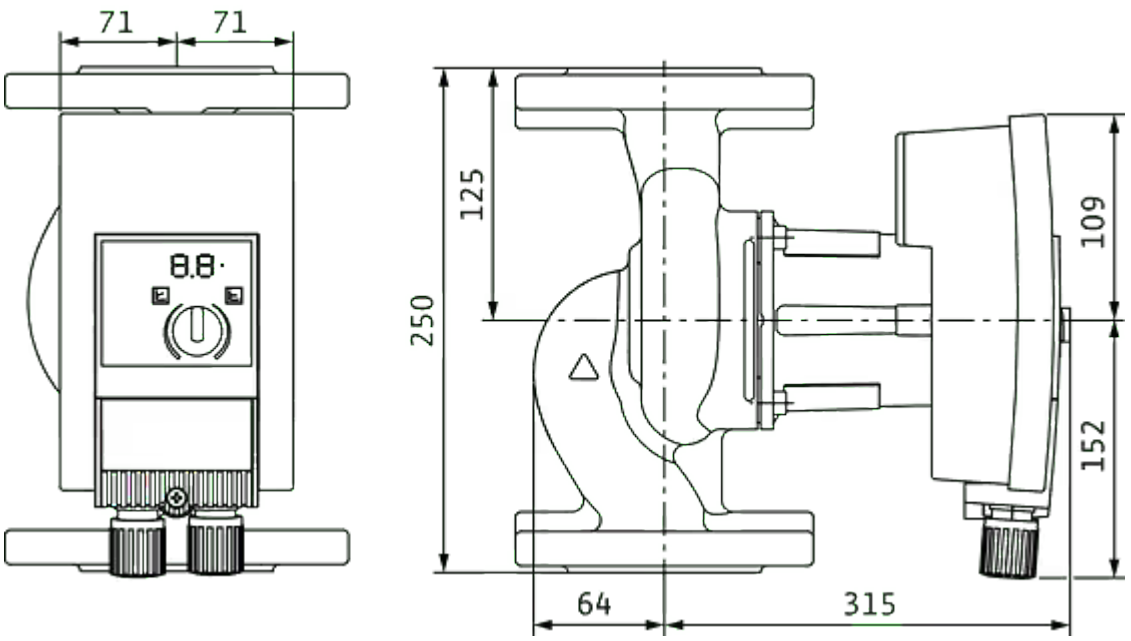

Wiring diagram

1~230V, 50/60 Hz

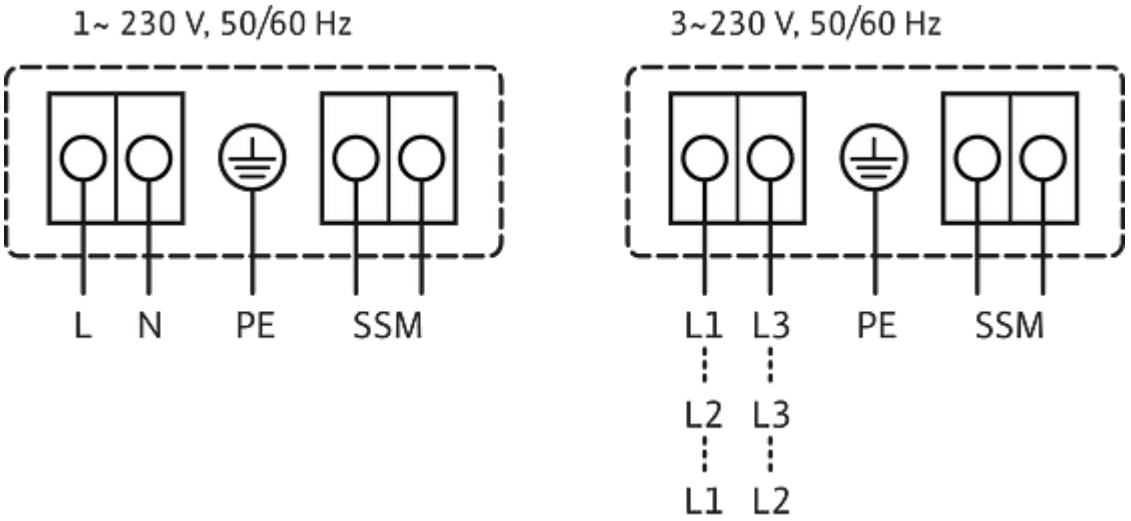

SSM: Collective fault signal
(NC contact in accordance with VDI 3814, load capacity 1 A, 250 V ~)

Standard: 1~230 V, 50/60 Hz
Option: 3~230 V, 50/60 Hz