Yonos PICO 30/1-8

Glandless pump circulator

Article number: 4215521

Data sheet

Hydraulic data

Maximum operating pressure *PN*	10 bar
Head max H_{max}	7.6 m
Flow max Q_{max}	4.4 m³/h
Minimum suction head at 50 °C *m*	0.5 m
Minimum suction head at 95 °C *m*	3 m
Minimum suction head at 110 °C	10 m
Min. fluid temperature T_{min}	-10 °C
Max. fluid temperature T_{max}	95 °C
Max. fluid temperature at max. ambient temperature of +25 °C T_{max}	95 °C
Max. fluid temperature at max. ambient temperature of +40 °C T_{max}	95 °C
Min. ambient temperature T_{min}	-10 °C
Max. ambient temperature T_{max}	40 °C

Motor data

Energy efficiency index (EEI) *	≤ 0.23
Mains connection	1~230 V ±10%, 50/60 Hz
Rated power P_2	58 W
Min. speed n_{min}	500 1/min
Max. speed n_{max}	4800 1/min
Power consumption $P_{1\,min}$	4 W
Power consumption $P_{1\,max}$	75 W
Emitted interference	EN 61000-6-3
Interference resistance	EN 61000-6-2
Electromagnetic compatibility	EN 61800-3
Threaded cable connection	1 x PG11

Motor data

Insulation class	F
Protection class	IPX4D

* The benchmark for the most efficient circulators is EEI ≤ 0.20

Materials

Pump housing	Grey cast iron
Impeller	PP-GF40
Shaft	Stainless steel
Bearing	Carbon, metal-impregnated

Installation dimensions

Pump connection	G 2
Pump connection (alternative designation)	RP 1 1/2 DN 30
Port-to-port length *L0*	180 mm

Equipment/function

Function

Control mode	Δp-v for variable differential pressure Δp-c for constant differential pressure Constant speed (3 speed stages)
Display	Setpoint Actual volume flow Actual power consumption Fault signals (error codes) Manually activated restart or pump venting function
Pump venting function	Manual

Equipment

Approvals and labels	CE VDE EAC
Display	LED segment display
Display information	Basic Versio n: LED display (small) for showing the set head or speed stage.
Pump control	Electronic-controlled pump
Quick electrical connection	Wilo Connector
Thermal insula-tion shell	As accessory

Equipment

Blocking-current proof motor	yes

Equipment

Particle filter	yes
Operating elements	Green button

Pump curves

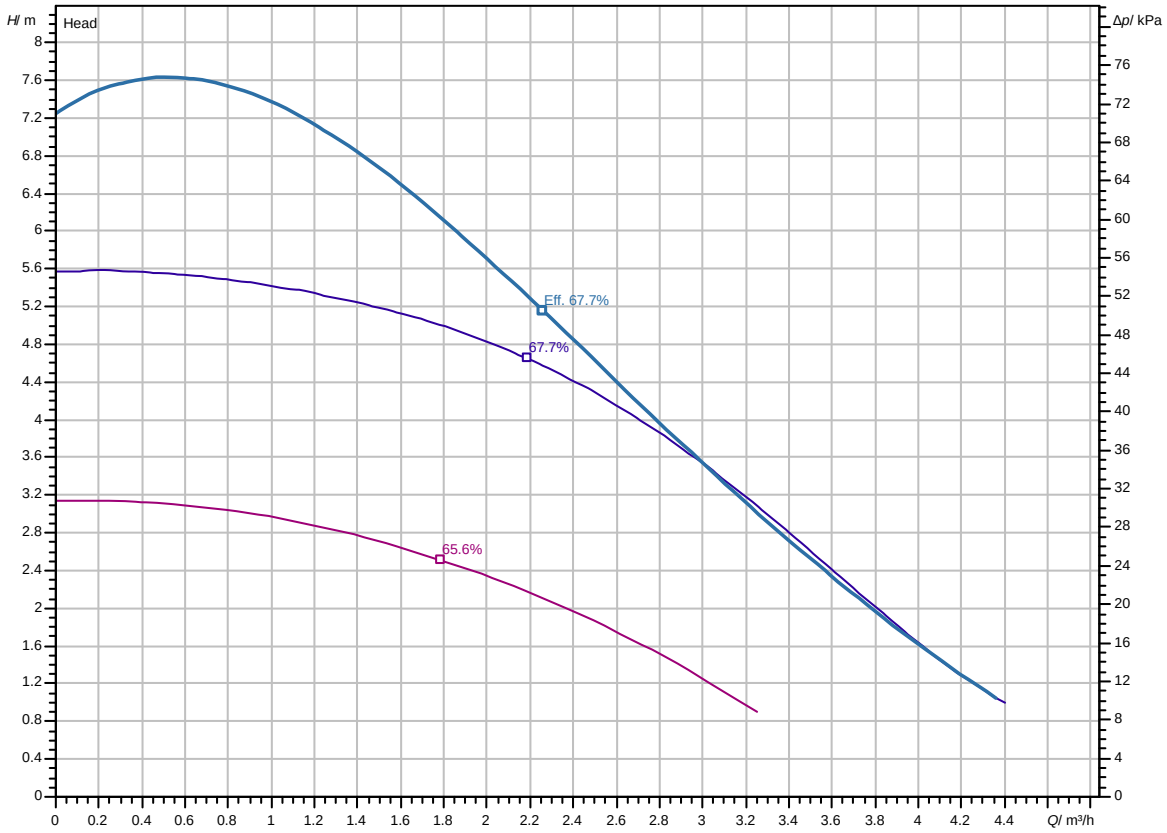

Fluid media	Water 100 %
Fluid temperature *T*	20.00 °C

Dimensions and dimensions drawings

Wilo-Yonos PICO 30/1-8 PN 10

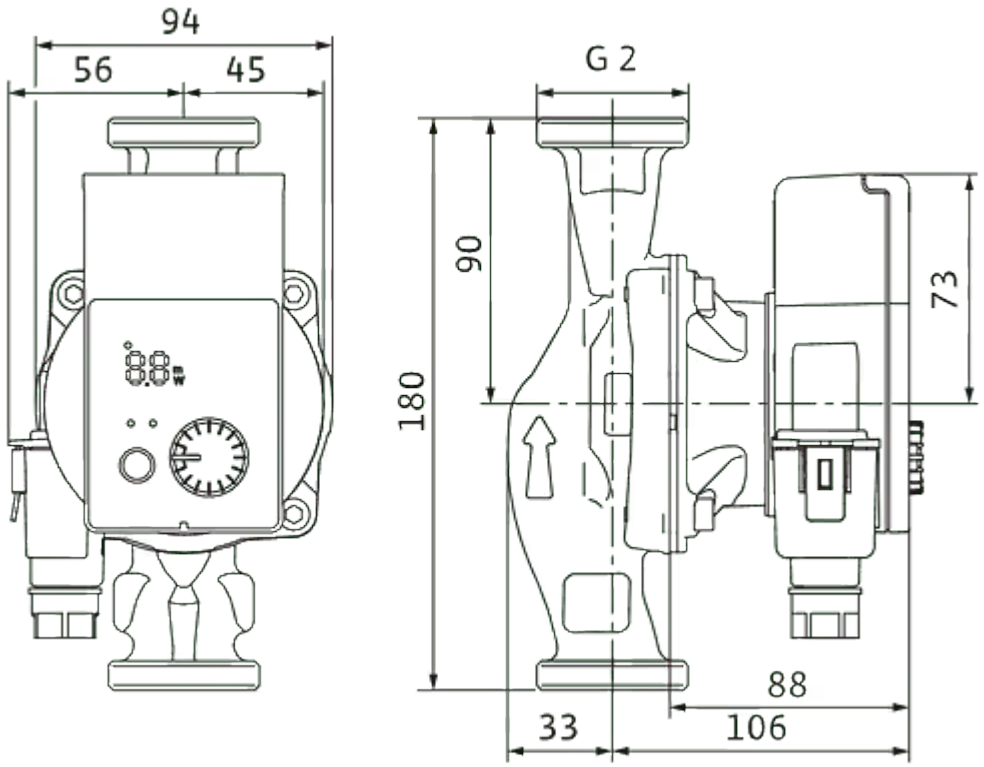

Wiring diagram

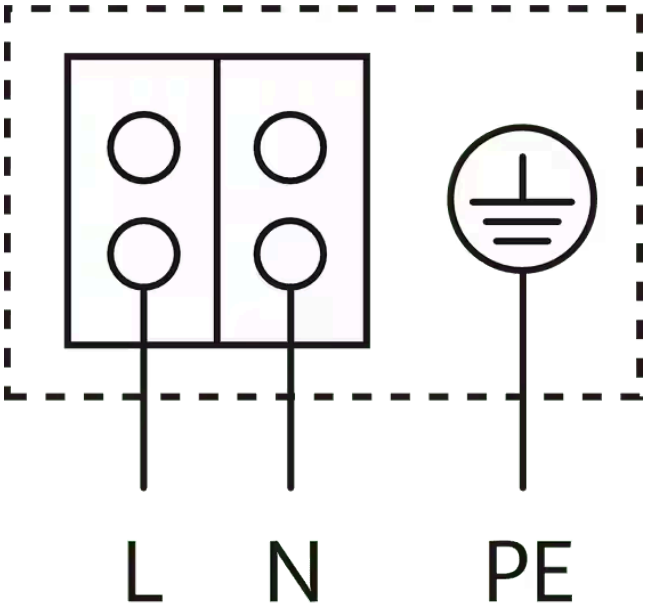

Blocking current-proof motor
Single-phase motor (EM) 2-pole - 1~230 V, 50 Hz